Instructions for use

HOME DELUXE
WIR MACHEN DEIN ZUHAUSE

Wooden play barbecue TASTY

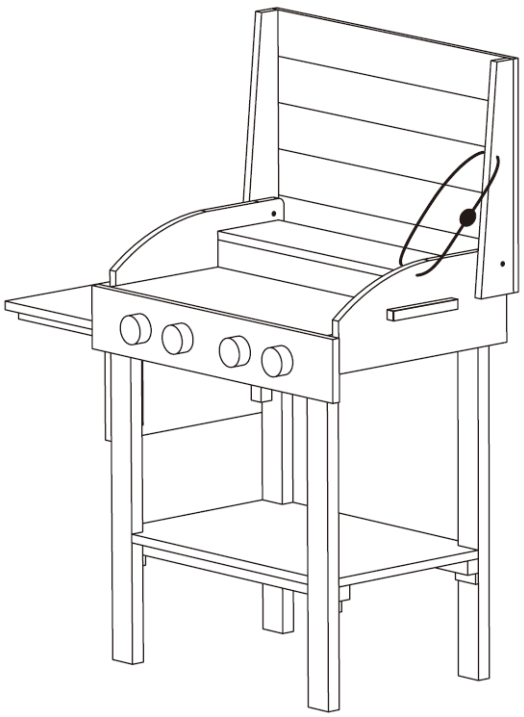

Original instructions for use

Made in Germany

IMPORTANT:
KEEP FOR FUTURE REFERENCE.
READ CAREFULLY!

Table of contents

1. General information ... 3
1.1. Product overview ... 3
1.2. General notes ... 3
1.3. Guarantee ... 3
2. Information on the instructions for use ... 4
2.1. Availability of the instructions for use ... 4
2.2. Target groups of the instructions for use ... 4
2.3. Information on the translation ... 4
2.4. Explanation of symbols ... 4
2.5. General information on the instructions for use ... 5
2.6. Intended use ... 5
2.7. General safety instructions ... 5
3. Product features ... 6
3.1. Technical data ... 6
4. Scope of delivery ... 7
5. Assembly ... 8
5.1. Safety instructions ... 8
5.2. Structure of the product ... 9
6. Application ... 14
6.1. Safety instructions ... 14
6.2. Initial commissioning ... 14
6.3. Operation ... 14
6.4. Storage location ... 14
7. Troubleshooting ... 14
8. Maintenance and care ... 15
8.1. Safety instructions ... 15
9. Dismantling ... 15
9.1. Safety instructions ... 15

10. Waste disposal 15
10.1. General information 15

Dear customer,

Thank you for choosing a product from **Home Deluxe GmbH**. We hope you enjoy your new TASTY wooden play barbecue.

The instructions for use support you in commissioning, operating and maintaining the product. The instructions for use and the safety instructions must be read carefully and in full. Observe these instructions to avoid hazards.

1. General information

1.1. Product overview

Model: Wooden play barbecue TASTY| Item ID: 27686| Variants: ID: 71942
Wooden play barbecue TASTY Blue / Red - Package 1 of 1 (barbecue incl. accessories) Item ID: 27685| Variant ID: 71940

1.2. General notes

In order to fulfil our claim, we are constantly improving quality, simplifying operation and adapting the products to customer requirements. Due to these changes, the current version of the instructions for use can be found on our homepage.

The term "product" is used in the instructions for use for the "TASTY" wooden barbecue.

1.3. Guarantee

The statutory liability for defects and warranty rights apply from the date of purchase.
Home Deluxe GmbH accepts no liability for damage caused by non-compliance with the instructions for use. Complaints arising from improper use are excluded from the warranty. In the event of defects in the product, please contact our customer service in writing using the contact form on our homepage, stating the product name, serial number and a photo of the type plate:

Home Deluxe GmbH
Schanzeweg 2
32312 Lübbecke
Germany
Tel: +49 (0)5743 6181-0
www.home-deluxe-gmbh.de

If you have any further questions, please contact our customer service team using the contact form.

2. Information on the instructions for use

2.1. Availability of the instructions for use

The instructions for use are part of the product and should be kept complete and in the immediate vicinity of the product.

2.2. Target groups of the instructions for use

The instructions for use must be read and observed by every person involved in one of the following activities or uses:

- Unpacking
- Assembly / Installation
- Commissioning / Operation
- Maintenance / inspection / care
- Troubleshooting / repair
- Waste disposal

2.3. Information on the translation

The original instructions for use were written in German. Any other language available is a translation of the German version.

2.4. Explanation of symbols

Symbol	Explanation of symbols
	**WARNING** The symbol indicates possible dangers that could result in fatal or serious injuries. Before carrying out the corresponding installation or application step, read the corresponding note.
	**INFO** The symbol provides important information and indicates material damage. Observe these before carrying out the corresponding installation or application step in order to understand problems and avoid damage.
	**Read instructions for use** The symbol indicates that the operating instructions must be read carefully before mounting/installing and/or operating the appliance.
	**CE labelling** The symbol declares the conformity of the product with the applicable requirements of the European Community. The current declaration of conformity is available on request from Home Deluxe GmbH.

2.5. General information on the instructions for use

The instructions for use refer to the TASTY wooden play barbecue. It contains important information on operation, maintenance and cleaning. The instructions for use, in particular the safety instructions, must be read carefully before using the product; keep the instructions for use in a safe place. Only use the product as described in these instructions for use to prevent accidental injury or damage. If you pass the product on to third parties, these instructions for use must also be handed over.

2.6. Intended use

The product is of high quality, durable and intended or suitable exclusively for private use to a reasonable and customary extent. **Caution!** Our product is intended for domestic use **only** and **not** for commercial use. The product is intended as outdoor play equipment and may only be used by children aged 3 years and over. Only use the product as described in these instructions for use. Any other use is considered improper and may result in damage to property or personal injury. The manufacturer accepts no liability for damage caused by improper or incorrect use.

2.7. General safety instructions

General hazard warnings



- Improper handling can lead to considerable personal injury and damage to property. For this reason, assembly, installation, commissioning, troubleshooting, maintenance and repair work may only be carried out by qualified persons
- Ensure that all parts are undamaged. Damaged parts pose a risk of injury and can affect safety and function.
- **Only** assemble the product if the scope of delivery is complete and in perfect condition
- Do not make any changes to the product
- Check the fastening at regular intervals.
- The product may only be used under the supervision of an adult.
- No nails, screws etc. must protrude from the wood during assembly, as these can cause injury.
- The product must not be installed over concrete, asphalt or other hard surfaces.
- Ensure that the floor anchoring is placed on a stable and load-bearing surface.
- Use suitable tools and materials to securely fasten the anchors
- Regularly check the stability of the anchors and make adjustments if necessary.
- Attach the anchors at ground level or below ground level to minimise the risk of tipping. Make sure that the anchors are fully anchored in the ground to ensure maximum safety.
- **Caution!** Not suitable for children under 36 months! Contains small parts! Danger of swallowing!
- **Attention!** Our product is intended for domestic use **only** and **not** for commercial use. The product is intended for outdoor use.

Danger for children



- Keep children away from packaging materials. There is a risk of suffocation!
- Keep children away from the assembly site while the product is being assembled. The scope of delivery contains small parts that can be swallowed or cause serious injury.
- Children can injure themselves when playing with the product or when pulling up on the product
- Do not place the product directly or in the immediate vicinity of a play area.
- Explain to the children how to use the product correctly and never leave them unsupervised while playing.
- Make sure that small children do not put small parts in their mouths
- The product may be used by children aged 3 years and older.

Risk of injury

Improper handling of the product can lead to injuries



- Check the product for visible damage before each use.
- Improper handling of the product can lead to injuries.
- Do not make any design changes to the product. Any modifications must be authorised in writing by the manufacturer and carried out in accordance with the instructions.
- Only place the product on a safe, level and firm surface.
- If the product is damaged, it must no longer be used. Damaged parts must be repaired or replaced with original spare parts in accordance with the manufacturer's instructions.
- Ensure that the product is permanently installed securely to avoid injury.
- Do not climb onto the product as there is a risk of falling and tipping over.
- Check all covers for screws and sharp edges and replace them if they are damaged.
- Please ensure that the item is set up on a stable and level surface.
- Keep the product at least 2 metres away from other structures and objects, e.g. fences, garages, houses, overhanging branches, washing lines or electrical cables.

Risk of damage



- Improper handling of the product can lead to damage.
- Do not open the packaging with sharp objects (e.g. knives, scissors or similar) as this may damage the product. Be careful when opening.
- After storage, check the product for changes in condition and damage. If there are any changes or damage to the product, it must no longer be used. Contact the manufacturer for further instructions and, if necessary, spare parts.
- Repair and maintenance work may only be carried out by qualified personnel. They serve to protect your children.
- Do not use the product near sources of heat or naked flames.

3. Product features

3.1. Technical data

TASTY	
Dimensions	64.5 x 36 x 70 cm

4. Scope of delivery

Check the packaging for external damage on delivery. Furthermore, immediately after unpacking, check that the scope of delivery is complete and that the product and all components are in perfect condition. Only assemble the product if the scope of delivery is complete and undamaged.

Components/parts

No.	Description of the	Quan-tity	Pictures
1	Footrest	4	
2	Bottom shelf	1	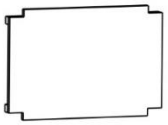
3	Panel left	1	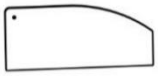
4	Panel right	1	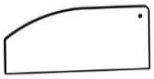
5	Rear panel	1	
6	Side shelf	1	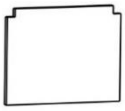
7	Side plate	1	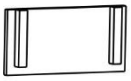
8	Support block	1	
9	Large storage area	1	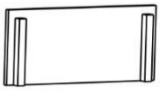
10	Supporter large storage area	1	
11	Top shelf	1	
12	Control panel	1	
13	Back panel	1	
A	Screw 6 x 30 mm	2	

No.	Description of the	Quan-tity	Pictures
B	Screw 3.5 x 30 mm	4	
C	Screw 3 x 30 mm	2	
D	Screw 3 x 25 mm	28	
E	Screw 3 x 18 mm	4	
F	Angle connector with screw	2	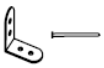
G	Screw	1	
I	Metal band	1	

5. Assembly

5.1. Safety instructions



- All health and safety information must be read.

Risk of injury
Improper handling during installation can lead to injuries



- Immediately after unpacking, check that the scope of delivery is complete and that the product and all parts are in perfect condition.
- Place the individual parts of the product outside two days before assembly. This allows the product to adapt to the ambient temperature and humidity and makes assembly easier.
- **Only** install the product if the scope of delivery is complete and in perfect condition.
- Make sure that the parcel is opened at the top. Be careful not to damage the product when opening.
- Keep children and persons with reduced physical, sensory or mental capabilities away from the product during assembly.
- Only place the product on a safe, level and firm surface.
- The product may only be installed by an adult.
- Always observe the mounting dimensions and use the mounting material supplied.
- Operating errors, assembly errors or damage caused by assembly are excluded from the warranty.
- Ensure that all parts are undamaged and correctly installed. There is a risk of injury if they are not installed correctly. Damaged parts can affect safety and function.
- Wear protective clothing such as safety shoes and protective gloves during assembly.

5.2. Structure of the product

The product is delivered disassembled and can be assembled with little effort. Follow the assembly instructions carefully. If the instructions are not followed, the function and safety of the product cannot be guaranteed.

Tools required

	Screwdriver		Cutter knife
	Measuring tape	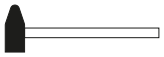	Hammer
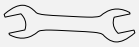	Spanner		

- The following instructions must be read carefully.
- Only install the product if the scope of delivery is complete and undamaged.
- **ATTENTION:** The wooden slats **must** be treated with varnish or oil before or after assembly.
- Wood is a natural product. There may be knots or resin pockets in the wood. Please check the wooden slats visually and place the side with the resin pockets facing downwards if there are any. Before using the products, they should be treated with a varnish or oil.

Step 1:
Attach the lower shelf (**2**) to the footrests (**1**) using the screws (**B**).

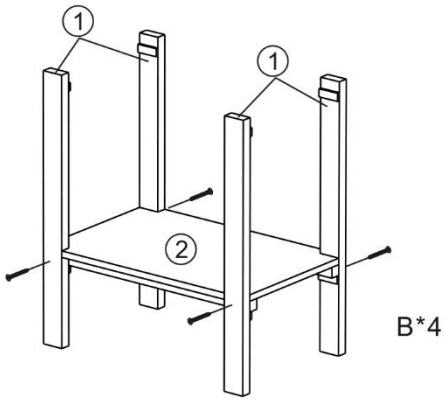

Step 2:
Take the left panel (**3**) and right panel (**4**) and attach them to the top of the footrest (**1**). Use the screws (**D**) for this.

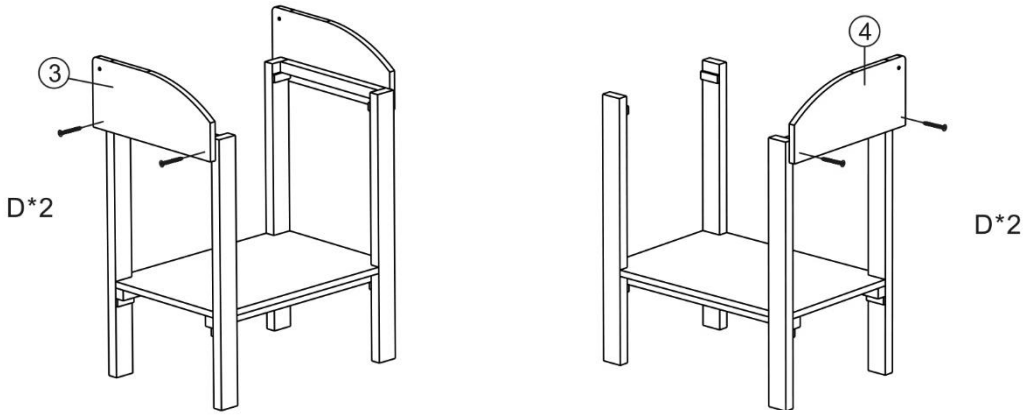

Step 3:
Also fit the rear panel (**5**) to the footrest. Use the screws (**D**) for this.

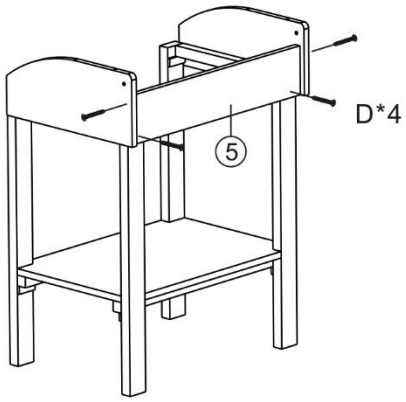

Step 4

Attach the side shelf (**6**) to the side plate (**7**) using the support block (**8**). Use the screws (**C, D**) for this.

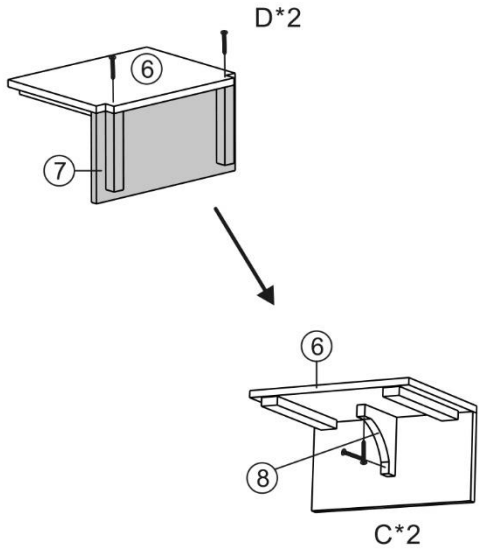

Step 5:
Now fit the components to the side of the frame using the screws (**D**).

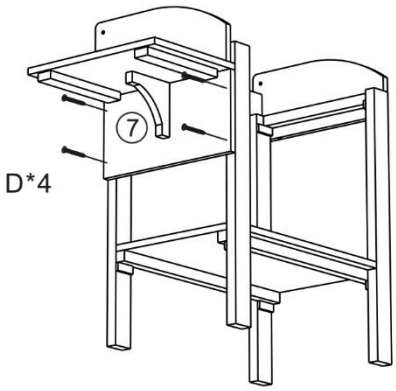

Step 6:

Screw the support (**10**) to the large support surface (**9**) using the screws (**D**) and insert this component.

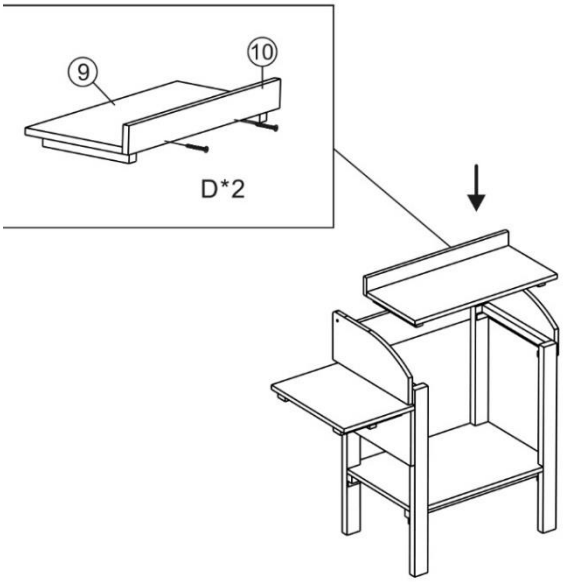

Step 7:
Fit the shelf at the top (**11**) to the play barbecue and secure it with the screws (**D**).

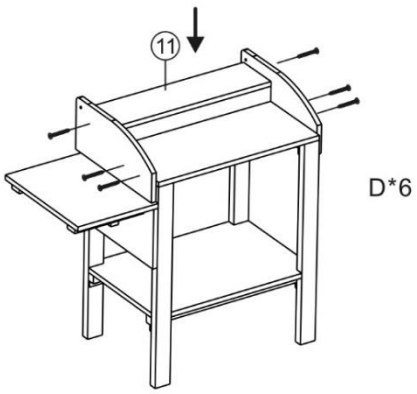

Step 8:

Fit the control panel (**12**) to the front of the play grill using the screws (**D**).

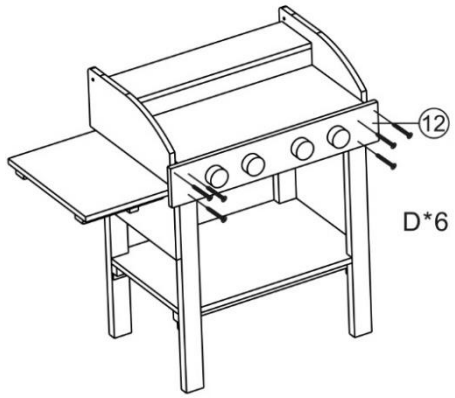

Step 9:

Finally, insert the back panel (**13**) and secure it with the screws (**A**).

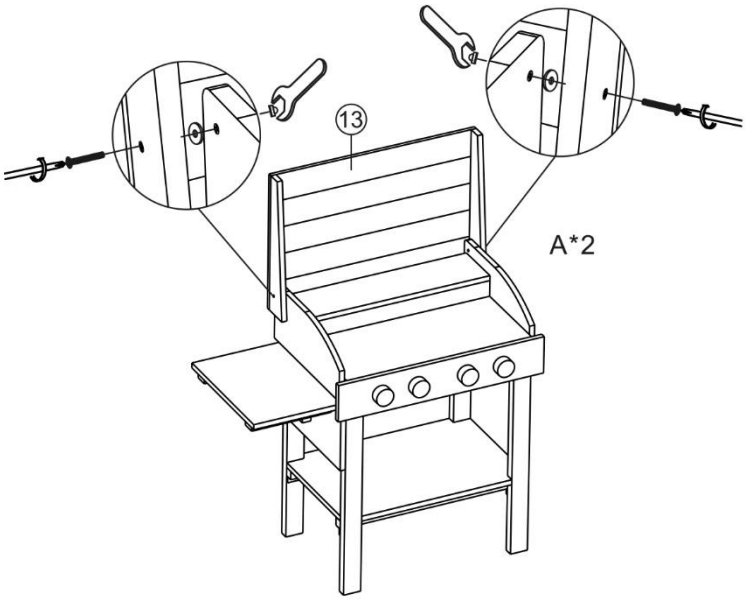

Step 10:

Fit the angle connectors (**F**) to the frame and screw them together with the screws (**E**). Screw the rear panel tight with the screw (**G**). Then attach the metal strip (**I**)

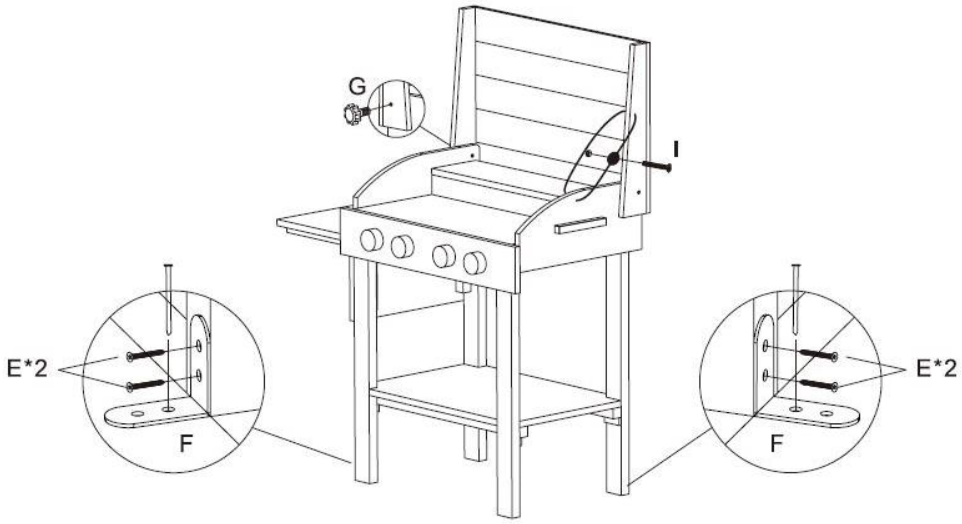

Wood properties

Resin galls are cavities filled with resin in tree trunks of resin-rich wood species (e.g. spruce, pine, larch). If these cavities are opened during processing of the wood by sawing or planing, the sticky resin leaks out. This can be easily wiped off with a cloth soaked in acetone.

6. Application

6.1. Safety instructions

The following health and safety information must be read carefully.

Risk of injury

Improper handling during operation can lead to injuries



- Do not use a damaged product.
- Do not make any changes to the product.
- The product may be used by children aged 3 years and older.
- **Risk of tipping over!** The product is not a climbing wall, climbing equipment or sports equipment. The product can topple over if loaded on one side.
- **Danger of falling**! Do not step on the storage surface of the product.
- Check the fastening at regular intervals.
- Explain to the children how to use the product correctly and do not leave them unsupervised while playing.
- Remove all sharp objects, broken glass or stones from the vicinity of the product. Playing children must not be endangered.
- Check all fastenings at regular intervals and tighten them.
- Check the wood for splinters at regular intervals. Sharp edges can be removed with sandpaper.

6.2. Initial commissioning

Check the product for damage before using it for the first time. The product may only be used if it is undamaged.

6.3. Operation

Check before using the product,

- the proper condition.
- all functions.
- Make sure that the product is not climbed on.

6.4. Storage location



- Store the product during the winter season or when not in use in a dry, well-ventilated place that is as protected from the weather as possible.

7. Troubleshooting

If the following faults occur during operation, please check the following fault causes using the following table. If the fault cannot be rectified by the measures listed, take the product out of operation.

Error	Possible cause	Solution
The product wobbles or vibrates	- The product stands on uneven surfaces - The fastening screws have come loose - The product is overloaded	- Place the product on a level surface - Tighten the fastening screws - Comply with load limits

If another problem occurs with the product, please contact us.

8. Maintenance and care

8.1. Safety instructions

Risk of injury
Improper handling during operation can lead to injuries



- Clean the surfaces with a hand brush or light air pressure.
- Do not use aggressive cleaning agents or high-pressure cleaners for cleaning.
- Oil all moving metal parts at regular intervals.
- Please check and maintain the most important parts of the play equipment regularly. Please note that the play equipment can fall over or otherwise become a hazard if you fail to check it. Your safety is our top priority!
- Maintenance should be carried out at the beginning of each season and at regular intervals during the season of use.

9. Dismantling

9.1. Safety instructions

Risk of injury
Improper handling during disassembly can lead to injuries



- Disassembly of the product must be carried out in reverse order to assembly. (**see chapter Assembly**)

10. Waste disposal

10.1. General information



- Dispose of the product and all components in accordance with local and country-specific regulations to prevent damage to the environment.
- Our packaging is made from environmentally friendly materials. They can be recycled and thus serve as valuable raw materials. Dispose of the packaging material (cardboard, dirty packaging, etc.) separately and professionally in accordance with the applicable national regulations.
- Contact the manufacturer if you are unsure about disposal.
- You can also obtain information on proper disposal from the local waste disposal centres.

Home Deluxe GmbH
Schanzeweg 2
32312 Lübbecke
Germany
Tel: +49 (0)5743 6181-0
www.home-deluxe-gmbh.de

ga-376-00-tasty
2025/01